УДК 530.12

© Петров А. Н., 2021

О ЛАЗЕРНОЙ ГРАВИТАЦИОННО-ВОЛНОВОЙ АНТЕННЕ С ДВУМЯ ПАРАЛЛЕЛЬНЫМИ ПЛЕЧАМИ*

Петров А. Н.[a,1]

[a] Астрономический институт им. П.К. Штернберга МГУ им. М.В.Ломоносова, г. Москва, 119234, Россия.

Анализируется возможность компенсации технического фазового шума лазера в линейном канале (резонатор Фабри-Перо) гравитационно-волновой антенны с двумя параллельными плечами за счёт нелинейного канала с фазовосопрягающими зеркалами.

Ключевые слова: детектирование гравитационных волн, лазерная антенна.

ON LASER GRAVITATIONAL WAVE ANTENNA WITH TWO PARALLEL ARMS

Petrov A. N.[a,1]

[a] Sternberg Astronomical Institute, Lomonosov Moscow State University, Moscow, 119234, Russia.

The possibility of the laser technical phase noise compensation in the linear channel (Fabry-Perot resonator) of the Gravitational Wave antenna with two parallel arms due two nonlinear channel with phase-conjugating mirrors is analyzed.

Keywords: gravitational wave detection, laser antenna.

PACS: 04.30.-w, 04.80.Nn, 95.55.Ym
DOI: 10.17238/issn2226-8812.2021.3.44-48

Introduction

In the work [1] (see also [2]) laser detector of gravitational waves (GW) with parallel arms is suggested. There is no an analysis of its functioning up to now. The goal of the present paper is, at least minimally, to close this gap. Another goal is to attract attention of readers to this interesting and complicated problem.

Before discussion of the work [1], following [3–5], we give a short information relating to functioning phase-reversing (PR) mirrors, which play a crucial role in the Grishchuk-Kulagin-Rudenko antenna (GKRA) [1]. Let us consider nonlinear media with cubic susceptibility χ, presented by a crystal at Fig. 1, and irradiate it by three pulses. Amplitudes of electric field for each of the four waves ($j = 1, 2, 3, 4$) depicted at Fig. 1 are given as usual

$$E_j(\mathbf{r}, \tau) = \frac{1}{2} A_j e^{i(\omega_j \tau - \mathbf{k}_j \cdot \mathbf{r})} + c.c.\,,$$

where A_j are complex amplitudes, ω_j and $\mathbf{k}_j$ are related frequencies and wave vectors, respectively.

*Author is very grateful to L.P. Grishchuk and V.N. Rudenko for the idea to study the problem of the paper, and to A.B. Gusev for numerous and useful discussions and recommendations.
Translated from the Russian by A. N. Petrov
[1]E-mail: alex.petrov55@gmail.com

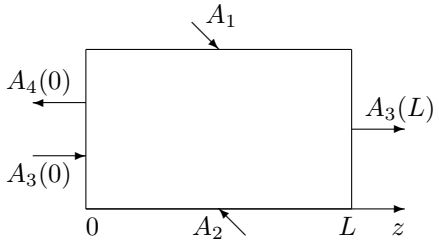

Fig. 1

For electric induction in nonlinear media one has

$$D = \varepsilon_0 E + 4\pi P^H \,,$$

where ε_0 is an usual linear dielectric permittivity, P^H — nonlinear polarization, which, for example, for E_4 has a form:

$$P_4^H(\omega_4 = \omega_1 + \omega_2 - \omega_3) = \frac{1}{2}\chi A_1 A_2 A_3^* e^{i[\omega_4\tau - (\mathbf{k}_1+\mathbf{k}_2-\mathbf{k}_3)\cdot\mathbf{r}]} + c.c.\,. \tag{1}$$

The following assumptions are:

1. Frequencies of the falling waves coincide $\omega_1 = \omega_2 = \omega_3 = \omega$.
2. Pair E_1 and E_2 is anti-collinear: $\mathbf{k}_1 + \mathbf{k}_2 = 0$.
3. Waves E_1 and E_2 are defined as basis ones: $|A_1|^2, |A_2|^2 \gg |A_3|^2, |A_4|^2$; A_1 and A_2 do not change along the length L of the crystal.
4. Signal wave E_3 and reversed wave E_4 depend on z only.
5. A_3 and A_4 depend on z weakly: $\partial^2 A_{3,4}/\partial^2 z \ll |\mathbf{k}_{3,4}|\,\partial A_{3,4}/\partial z$.
6. The situation is stationary: $A_j \neq A_j(\tau)$.

E_3 and E_4 can be found by resolving the Maxwell equations under the above assumptions:

$$A_3(L) = \sec|\kappa|\,LA_3(0), \qquad A_4(0) = -ie^{i\theta}\mathrm{tg}\,|\kappa|\,LA_3^*(0)\,, \tag{2}$$

where $\kappa \equiv 2\pi\omega A_1 A_2/c\sqrt{\varepsilon_0}$ and θ is a summary pase of amplitudes A_1 and A_2. Denoting $A_t \equiv A_3(L)$ as a penetrating wave and $A_r \equiv A_4(0)$ as a reflected wave and setting $A_3(0) \equiv A_0 e^{i\delta}$ one has

$$A_t = tA_0 e^{i\delta}\,, \tag{3}$$

$$A_r = rA_0 e^{-i\delta + i\theta - i\pi/2}\,, \tag{4}$$

where A_0 and δ — constants, $t \equiv \sec|\kappa|\,L$ and $r \equiv \mathrm{tg}\,|\kappa|\,L$. The therm "PR-mirror" is supported by the fact that under reflection (4) the phase δ changes a sign. Coefficients t and r satisfy the relation

$$r^2 + 1 = t^2\,. \tag{5}$$

Recall the principle of the work of an usual laser GW-antenna with two orthogonal arms [2,6,7]. If laser is working ideally then for detecting GW one needs in a one Fabri-Perot (FP) resonator only [8,9]. In a reality, technical noise of laser prevails a waited signal significantly. In the present paper, we consider fluctuations of a frequency $\Delta\omega$, which are just leading to a phase noise.

To compensate $\Delta\omega$ it is necessary to add second orthogonal arm (see Fig. 2). The second arm is identical to the first one, and, in both the arms, the same signal, although decoupled, is propagated. As a result, phase noise is compensated. On the other hand, due to the polarization properties of GW

its influence onto shifting free mirrors in each of arms is different, therefore a photo-detector (PD) will register a signal.

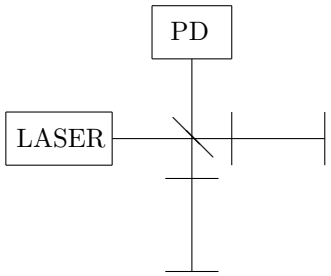

Fig. 2

2. Detector of gravitational waves with parallel arms

Let us turn to the scheme of GKRA depicted on Fig. 3. In a one of the arms, call it as linear one (L-arm), there is the FP interferometer with usual mirrors. In another parallel arm, call it as nonlinear one (N-arm), there is FP resonator with PR mirrors. Resonator in N-arm has been studied in detail, see [10–12]. As is was assumed in [1], its using in the GW detector scheme gives both a possibility to compensate a phase noise in L-arm and to detect GW. It is essential that authors suppose that L-arm and N-arm react to GW in different ways. Let us analyze these assertions from various points of view.

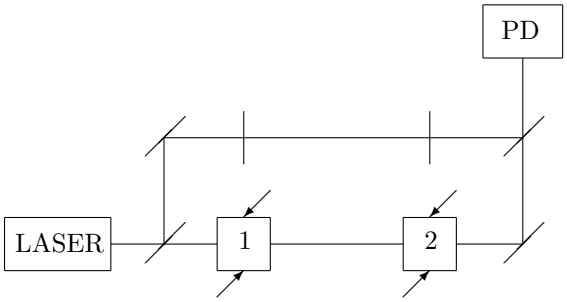

Fig. 3

Calculate a complex amplitude A^N at the exit of N-arm. With making the use of formulae (3), (4) and technique [13] one obtains

$$A^N = \frac{t^2 A_0^N e^{i(\delta_N - \omega\cdot l/c)}}{1 - r^2 e^{i(\theta_1 - \theta_2)}}\,, \tag{6}$$

where θ_1 and θ_2 are summary phases of the basis waves (see (2) and (4)) for the PR mirrors 1 and 2, respectively. In the work [1], it is set $\theta_1 = \theta_2 = 0$. Complex amplitude A^L at the exit of L-arm has the usual form [13]:

$$A^L = \frac{T A_0^L e^{i(\delta_L - \omega\cdot l/c)}}{1 - R e^{-i2\omega\cdot l/c}}\,. \tag{7}$$

In (6) and (7), δ_N, δ_L and A_0^N, A_0^L are phases and real amplitudes at entrances of N- and L-arms, respectively. The distances between mirrors are the same and are equal to l. In (7), passing rate, T, and reflection coefficient, R, satisfy

$$T + R = 1\,. \tag{8}$$

Following the principle of constructing GW detectors, presented at the Fig. 2, we maximally equalize characteristics of parallel arms in GKRA. Thus, we require

$$t^2 = R\,, \tag{9}$$

$$t^2 A_0^N = T A_0^L\,, \tag{10}$$

where $R \sim 1$.

For a more effective work of GKRA we assume that photon life time in FP resonator is of the order of the half-life of GW. Failures $\Delta\omega$ existing more than half-life of GW are not dangerous because such a situation means that laser is working on the basis frequency $\omega + \Delta\omega$ only. Failures $\Delta\omega$ existing significantly less than half-life of GW can be averaged by various ways as we assume.

Thus, we set that more dangerous failures $\Delta\omega$ exist during time comparable with half-life of GW. Below we analyze possibilities to compensate a noise of this kind setting $\Delta\omega = \text{const}$.

2.1. GKRA with the only one laser

To compensate $\Delta\omega$ at the exit of L-arm one has to require that at the exit of N-arm the noise depends on the same variation $\Delta\omega$. A reasonable method to achieve it is as follows. One has to pump up PR mirrors and create signal rays for both of the arms by the only one laser. However, in this case the laser power could be not enough to satisfy $|A_1|^2, |A_2|^2 \gg |A_3|^2, |A_4|^2$. Nevertheless, functioning the PR mirrors at commensurate intensities $|A_j|^2$ does not change principally [15].

Thus, let us analyze the only one laser case. Phases θ_1 and θ_2 in (6) differs by $2\omega \cdot l/c$ and A^N acquires the form:

$$A^N = \frac{t^2 A_0^N e^{i(\delta_N - \omega\cdot l/c)}}{1 - r^2 e^{-i2\omega\cdot l/c}}\,. \tag{11}$$

In order to obtain variations ΔA^N and ΔA^L corresponding to $\Delta\omega$ one has to change ω to $\omega + \Delta\omega$ both in (6) and in (7). As is seen, compensation of phase noise makes a detection of GW impossible. (Such a conclusion follows from a private discussion of A. Anderson with L.P. Grishchuk.)

Formula (11) is identical to (7) because the pumping up was "prolonged" to PR mirror 2. Let us exchange it by the usual mirror identical to mirrors in L-arm. Then, taking into account (9) one has

$$A^N = \frac{t\sqrt{T} A_0^N}{1 - r^4}\left[e^{i(\delta_N - \omega\cdot l/c)} + r^2 e^{i(\delta_N - \omega\cdot l/c) + i\theta - i3\pi/2}\right] \tag{12}$$

instead of (11), θ is a constant. Now, as it was required by authors [1], each of the arms reacts to GW in different ways. Nevertheless, GW displacements Δl, which are equal for both of the arms, cannot be separated from the noise $\Delta\omega$. Indeed, in a reality, l and ω enter into (11) and (7) in the form $\omega \cdot l/c$ only. Finally, intensity on FD depends on fluctuation $\Delta(\omega \cdot l/c)$ only, and it is related to any pairs of amplitudes at the exits of parallel arms. Such a problem has been noted in [16].

2.2. GKRA with the "ideal pumping up" of PR mirrors

The authors [1] remark a possibility when the pumping up PR mirrors is providing by a wave with a frequency ω without any fluctuations. At the same time, signal waves in both the arms are provided by the only one laser with a frequency ω with a failure $\Delta\omega$. Consider such a situation.

First, the condition $\omega_1 = \omega_2 = \omega_3 = \omega$ is destructed, therefore under the reflection the frequency (1) is reversed. Besides, there is a violation of space synchronicity [4, 5] induced by the "gap" Δk between wave vectors under the 4 wave mixing in the crystal. Here, with taking into account the condition $\mathbf{k}_1 + \mathbf{k}_2 = 0$, the "gap" appears due to only the difference in frequencies of falling and reflected rays: $\Delta k = 2\Delta\omega\sqrt{\epsilon_0}/c$. After taking into account all the above, one has for the exit from the N-arm:

$$A^N = \frac{t^2 A_0^N e^{i(\delta_N - \omega\cdot l/c) e^{i\Delta k L}}}{1 - r^2 e^{i(\theta_1 - \theta_2 - 2\omega\cdot l'/c)}}\,, \tag{13}$$

where $l' = l\left(1 + (1 - r^2)\sqrt{\epsilon_0}/r\right)$ and, unlike (7), the failure $\Delta\omega$ is included. By the "ideal"pumping up, phases θ_1 and θ_2 in (13) can be thought as constant ones, and can have arbitrary values.

If one has a possibility to neglect a violation of space synchronicity, then in (13) to set $\Delta k = 0$ and $l' = l$. However, it is necessary to take into account a real situation:$R \cong 1 - 10^{-3} \cong r^2$, $L \cong 10^{-1}$ m, $\omega/c \cong 10^{-7}$ m^{-1}, $\Delta\omega/\omega \cong 10^{-13}$ [17], $l \sim 10^3$ m and $\Delta l/l \sim 10^{-20}$.

Let us discuss (13) and (7). Exchange in L-arm and, respectively, in (7), the length l by l'. Choose in (13) $\theta_1 - \theta_2 = 2\omega l'/c = \text{const}$. Unlike the scheme depicted at Fig. 3, where the recombined signal is analyzed at the unique PD, let us compare intensities from each of the arms that excludes influence of the multiplier $\exp(i\Delta k L)$ in (13). As a result, with taking into account (9) and (10), fluctuations $\Delta|A^N|^2$ and $\Delta|A^L|^2$, induced by $\Delta\omega$, will be the same $\Delta\omega l'/c$. Under the action of GW one has $\Delta|A^N|^2 \sim \Delta\omega\Delta l/c$ (it is only the second order of smallness), whereas $\Delta|A^L|^2 \sim \omega\Delta l'/c$. Thus, in this case, both a compensation of $\Delta\omega$ and detection of GW are possible simultaneously.

3. Conclusions

The result of the point 2.1 is that GKRA does not work at the only one laser for the whole system. The positive result of the point 2.2 is based on the assumption that pumping up the PR mirrors is provided by the "ideal" wave. However, there are no sources of such a radiation. In a reality, together with a noise of signal waves one has to take into account independent noise of the basis waves. But it is another task that arises a definite pessimism. Nevertheless, if one assumes that there exists (unknown now) technique with the aforementioned properties for reversing phases and frequencies, but without dominated noise, the problem of GKRA with parallel arms would be obtained a chance for solution. Possibly, it is the task for further study.

References

1. Grishchuk L.P., Kulagin V.V., Rudenko V.N. //Proc. Fifth MG-meeting. 1988. Univ. West Australia. 8-13 August. P. 1803.
2. Miljukov V.K., Rudenko V.N. Status and perspectives of gravitational-wave experiments. Itigi nauki i techniki. Astronomia. 1991. T. 41. Moskva: VINITI. P. 147. (In Russian)
3. Yariw A. and Papper D.M. //Opt. Lett. 1977. Vol. 1. 16.
4. Yariw A. Quantum electronics and nonlinear optics. Moskva: Sovetskoe radio, 1973. (In Russian)
5. Zel'dovich B.Ya., Pilipetskii N.F., Shkunov V.V. Reversing Wave front. Moskva: Nauka, 1985. (In Russian)
6. Drever R.W.P. //Gravitational Radiation. Eds. N. Deruelle and T. Piran; North Holland, 1983. P. 321.
7. Giazotto A. //Phys. Rep. 1989. Vol. 182. P. 356.
8. Rudenko V.N., Sazhin M.V. //Kvantovaja elektronika. 1980. T. 7. S. 2344. (In Russian)
9. Alekseev A.D., Vitushkin L.F. Kolosnitsin N.I., Moskovkin V.M. //Zh.E.T.P. 1980. T. 79. S. 1141. (In Russian)
10. Lam J.F. and Brown W.P. //Opt. Lett. 1980. Vol. 5. P. 61.
11. Kwong S.-K., Yariv A., Cronin-Golomb W. and Fischer B. //J. Opt. Soc. Am. A. 1986. Vol. 3. P 157.
12. Yeh P., KroshnevisanM., Ewbank M.D. and Tracy J. //Opt. Commun. 1986. Vol. 57. P. 387.
13. Born M. and Wolf E. Principles of optics. OXFORD'LONDON-EDINBURGH. NEW YORK. PARIS-FRANKFURT: Pergamon Press. 1968.
14. Yariv A. //Opt. Commun. 1977. Vol. 21. P. 49.
15. Cronin-Golomb W., White J.O., Fischer B. and Yariv A. //Opt. Lett. 1982. Vol. 7. P. 313.
16. Schnupp L. //Private communication. 1990.
17. Hariharan P. //Rep. Prog. Phys. 1990. Vol. 54. P. 339.

Авторы

Петров Александр Николаевич, д.ф.-м.н., ведущий научный сотрудник, Астрономический институт им. П.К. Штернберга МГУ им. М.В.Ломоносова, Университетский пр-кт, д. 13, г. Москва, 119234, Россия.
E-mail: alex.petrov55@gmail.com

Просьба ссылаться на эту статью следующим образом:
Петров А. Н. О лазерной гравитационно-волновой антенне с двумя параллельными плечами. *Пространство, время и фундаментальные взаимодействия.* 2021. № 3. С. 44—48.

Authors

Petrov Alexander Nikolaevich, Doctor of Physical and Mathematical Sciences, Leading Researcher, Sternberg Astronomical Institute, Lomonosov Moscow State University, Universitetsky Prospekt 13, Moscow 119234, Russia.
E-mail: alex.petrov55@gmail.com

Please cite this article in English as:
Petrov A. N. On laser Gravitational Wave antenna with two parallel arms. *Space, Time and Fundamental Interactions*, 2021, no. 3, pp. 44–48.